Optik - International Journal for Light and Electron Optics 185 (2019) 168–177

Contents lists available at ScienceDirect

Optik

journal homepage: www.elsevier.com/locate/ijleo

Original research article

A high-precision and high-linearity readout integrated circuit for infrared focal plane array applications

Tong Zhou[a], Junsheng Liu[b], Bo Fu[b], Yu Cao[a], Yong He[a], Bo Jiang[a,*], Yan Su[a,*]

[a] School of Mechanical Engineering, Nanjing University of Science and Technology, Jiangsu, 210094, China
[b] Xi'an Modern Control Technology Research Institute, Xi'an, 710065, China

ARTICLE INFO

Keywords:
Readout integrated circuit
Infrared focal plane arrays
High linearity
Capacitive transimpedance amplifier

ABSTRACT

This paper proposes a readout integrated circuit (ROIC) with high precision and high linearity based on the standard capacitive transimpedance amplifier (CTIA) structure. A high-swing cascode current mirror is introduced, which can restrain the influence of the front-end unstable voltage on the integrating unit. Also, the high-swing cascode current mirror can reduce the influence of the integral nonlinear error caused by the finite gain of the amplifier on the bias point, which will significantly increase the linearity and reduced the nonlinear error of the output. Moreover, buffered direct injection method is adopted in the bias circuit in order to ensure the bias point stability and reduce the non-uniformity. A 4 × 2 experimental chip have been fabricated by adopting AMS 0.35 μm CMOS process. The simulation and experimental results demonstrate the ROIC with the features of high linearity, high injection efficiency, stable bias point and low noise, which is suitable for high performance applications.

1. Introduction

The readout circuitry is a highly integrated circuit that integrates various functions of the focal plane array into a single semiconductor chip, which is an important interface between infrared focal plane arrays (IRFPAs) and signal processor [1–3]. Its basic function is to convert and amplify the signal of the IRFPAs and transmit it to the signal processor circuit [4–6]. The study on readout circuits is closely related to the development of focal plane arrays. Since the emerging of infrared focal plane arrays, some readout circuit technologies for CCD imaging have begun to be employed in infrared focal plane arrays application [7]. At present, some widely accepted structures, including source follower per detector (SFD) [8,9], direct injection (DI) [10,11], gate modulation input (GMI) [12,13], current mirroring integration (CMI) [14], buffered direct injection (BDI) [15,16] and capacitive transimpedance amplifier (CTIA) [17–19], can be used for different infrared focal plane arrays. Different readout circuit structures should be chosen according to different detectors, different application constraints and different application requirements [20].

Infrared imaging systems are required for a number of high precision applications, such as disease surveillance, instrument faults diagnosis, cloud characteristics, and whole sale distributed temperature measurement. These applications pose great challenges to the readout circuit design. Low noise and high signal-to-noise ratio impose stringent requirements on the design of infrared focal plane readout circuits. CTIA is presently one of the most successful and widely applied structure, which operates as a current-voltage converter consisting of an amplifier and a feedback integral capacitor [21,22]. Current generated by the pixels is integrated over the feedback capacitor, a reset switch is used to discharge the integral capacitor and reset its output to the reference voltage. The bias point of the detector can be well controlled due to the "virtual short" characteristics of the deep negative feedback amplifier. This

* Corresponding authors.
E-mail addresses: bjiang@njust.edu.cn (B. Jiang), suyan@njust.edu.cn (Y. Su).

https://doi.org/10.1016/j.ijleo.2019.01.046
Received 1 August 2018; Received in revised form 17 January 2019; Accepted 19 January 2019
0030-4026/ © 2019 Elsevier GmbH. All rights reserved.

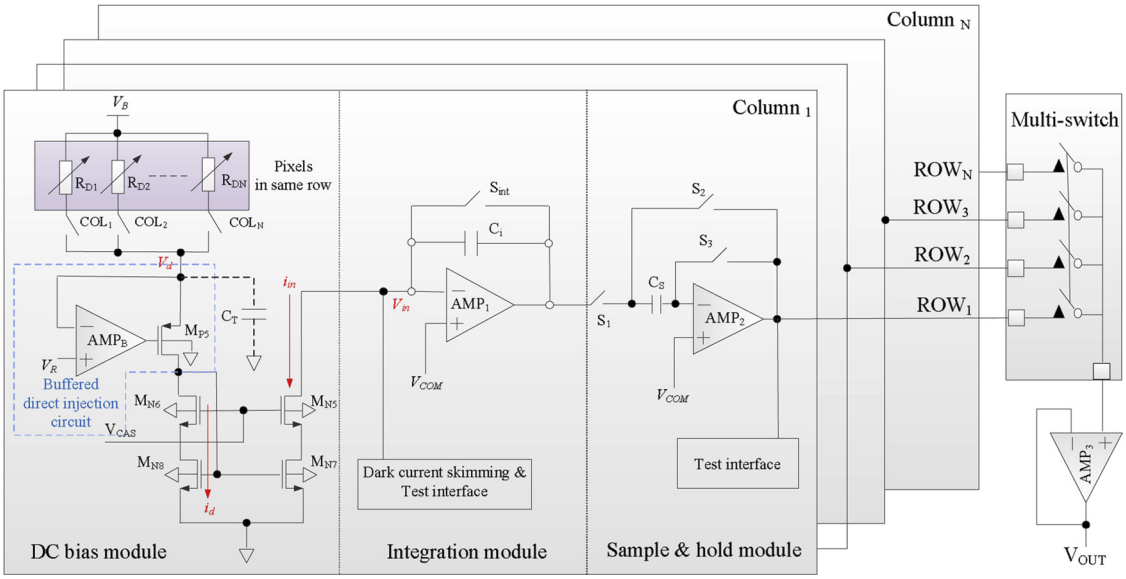

Fig. 1. Proposed readout circuit architecture.

structure processes a high dynamic output range and high injection efficiency. However, integral voltage error resulted from the amplifier finite gain and the integral gain variation will decrease the linearity and the bias stability, which may be a deficiency in its many excellent performances.

In order to decrease the integral voltage error, an improved structure is proposed based on the standard capacitive transimpedance amplifier structure, which employs a buffered direct injection module to bias the bolometer pixels. The buffered direct injection module employs high-gain amplifier to decrease input impedance, enhance injection efficiency and improve the bias point stability. In addition, a current mirror is involved to effectively isolate the bias module and integration module, which not only reduces the influence of the unstable voltage on the integration unit, but also reduces the influence of the integrator nonlinear caused by the finite gain of the amplifier on the bias point, so the integral accuracy can be improved significantly.

2. Circuit structure

The bias circuit proposed in this paper is shown in Fig. 1. A deep negative feedback differential amplifier (101 dB open-loop gain) is employed to reduce input impedance, and M_{P5} is used to bias the focal plane array pixels. R_{D1}-R_{DN} are focal plane array pixels located in the same row, which will be selected one by one by the column switches to read the infrared signal that the pixel responds to. In addition, two test interfaces are reserved for performance estimation, and the dark currents from the pixels can be skimmed by the off-chip dark current skimming circuit. At one time, only one pixel in the same row is biased, and the bias time and integration time are equal. This pulse bias method can significantly reduce the integral error caused by the self-heating effect. Since the 101 dB open-loop gain is high enough to make the differential amplifier AMP_B operate in a deep negative feedback mode, voltage variations at the drain of M_{P5} affect V_d to a lesser extent, which makes the voltage of bias point can be very stable. The detector current I_D can be expressed as follows:

$$I_D = \frac{V_B - V_d}{R_{DN}} \tag{1}$$

where, V_B is voltage of adjusting point, V_d is voltage of bias point, R_{DN} is the resistance of the focal plane array pixels. Since the open loop gain of the amplifier is large, $V_d = V_R$. To eliminate the influence of integral nonlinear error on the bias point, a high-swing and low-voltage cascode current mirror is introduced to mirror the signal current. The mirrored current will be integrated by the integration module. Due to the Miller effect, the integrating capacitance can be very small to obtain low-noise and high-sensitivity performance.

The sample & hold module is employed to sample the integration voltage and hold it for sequence reading, which is divided into two periods. In the sampling period, S_1 and S_3 are on and S_2 is off. Thus, the voltage across C_S tracks the output voltage of integration module. In the next period, S_1 and S_3 turn off and S_2 turns on, placing the capacitor C_S around the AMP_2 and entering the circuit into the amplification mode. Since the charge on the capacitor C_S must be conserved, the output voltage of the sample & hold module rises to a value approximately equal to the output voltage of integration module, which can be readout by the subsequent stages.

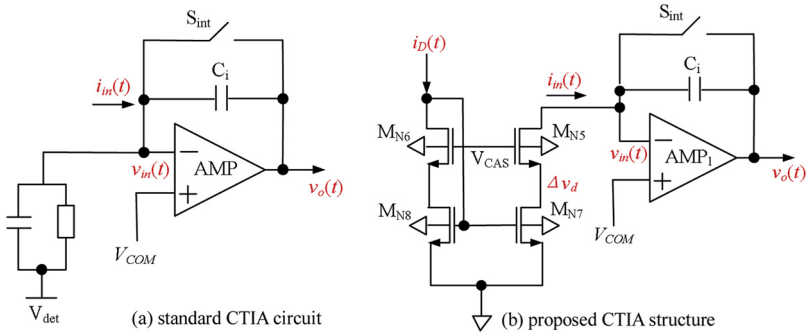

Fig. 2. The standard CTIA circuit and the proposed improved CTIA circuit.
(a) standard CTIA circuit (b) proposed CTIA structure.

3. Circuit performance analyses

The injection efficiency and bandwidth of the circuit are as follows:

$$\eta(s) = \frac{(1+A)g_m R_D}{(1+A)g_m R_D + 1}\left(\frac{1}{1 + s/2\pi f_{BW}}\right) \tag{2}$$

$$f_{BW} = \frac{1 + (1+A)g_m R_D}{2\pi R_D C_T} \tag{3}$$

Where, g_m is the transconductance of M_{P5}; A is the open loop gain of AMP_B; C_T refers to bypass capacitor of the circuit, which caused by the parasitic effect; R_D is the pixel resistance. In Eq. (2), $(1 + A)g_m R_D \gg 1$. Therefore, the injection efficiency of this circuit approximates 1.

Fig. 2 shows the standard CTIA circuit [22] and the proposed improved CTIA circuit to analyze the bias point stability and linearity. As shown in Fig. 2 (a), the input current of the integral module at time t is $i_{in}(t)$. The input voltage of the integrator is $v_{in}(t)$ and the output voltage is $v_o(t)$, then the input current can be expressed as:

$$i_{\text{in}}(t) = C_i \frac{d[v_{in}(t) - v_{\text{o}}(t)]}{dt} \tag{4}$$

The change in infrared radiation induced by the infrared focal plane arrays is a very low frequency signal. Therefore, the input current $i_{in}(t)$ can be approximated as direct current I_{in}. Eq. (4).can be equivalent to:

$$I_{\text{in}} = C_i \frac{d[v_{in}(t) - v_{\text{o}}(t)]}{dt} \tag{5}$$

The boundary conditions of Eq. (5) are:

$$t \neq 0 \text{ (integration period): } A_V[V_{COM} - v_{in}(t)] = v_{\text{o}}(t) \tag{6}$$

$$t = 0 \text{(reset period): } A_V[V_{COM} - v_{in}(0)] = v_{\text{o}}(t) = v_{in}(0) \tag{7}$$

In Eq. (7), $v_{in}(0)$ and $v_o(t)$ respectively express the voltages at the input and output of the integrator at reset period; A_V refers to the open loop gain of the integral amplifier. Eqs. (5)–(7) are taken into the calculation of $v_{in}(0)$ and $v_{in}(0)$, and the following can be obtained:

$$v_{\text{in}}(t) = \frac{I_{in} \times t}{(1 + A_V)} + \frac{A_V}{(1 + A_V)} V_{COM} \tag{8}$$

$$v_{\text{o}}(t) = \frac{A_V}{(1 + A_V)} V_{COM} - \frac{A_V I_{in}}{(1 + A_V)} t \tag{9}$$

According to Eq. (8), the relationship between $v_{in}(t)$ and the gain of the integrator can be obtained. When $t = 0$ and A_V is infinite under ideal conditions, $v_{in}(t)$ is infinitely close to V_{COM}. However, at any time t, when A_V is a finite value, the change of $v_{in}(t)$ varies along with the time. For a standard CTIA circuit, $v_{in}(t)$ is not only the input to the detector integrator, but also the bias point of the pixels. The change of $v_{in}(t)$ with time will inevitably bring a large nonlinear error to the integrator output voltage. In the paper, A high-swing current mirror is used to isolate the bias module and integration module to guarantee the stability of the bias point. As Fig. 2(b) shows, the cascode current mirror "shields" the bottom transistor (M_{N7} and M_{N8}) from variations of $v_{in}(t)$, the variations of the drain voltage of M_{N7} can be calculated:

$$\Delta v_{\text{d}} = v_{in}(t)/[(g_{m5} + g_{mb5})r_{oN5}] \tag{10}$$

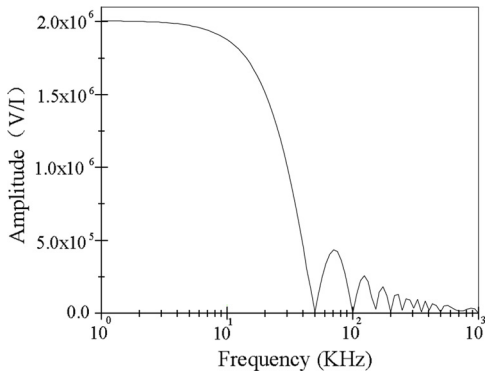

Fig. 3. The amplitude-frequency response curve.

Where g_{m5} is the transconductance of M_{N5}, g_{mb5} is the substrate transconductance of M_{N5}, r_{oN5} is the equivalent resistance between drain and source of M_{N5}.

According to (10), the variations of $v_{in}(t)$ are reduced to $(g_{m5} + g_{mb5})\, r_{o5}$ times by the cascode structure, which have little impact on the drain voltage of M_{N7}. That means, the mirrored current i_{in} can accurately copy the input current i_d (Fig. 1).

In order to make current mirror matching well with buffered direct injection and integration circuit, all of the transistors should be in saturation to ensure a reliable state. In order to ensure all of the transistors in saturation, V_{CAS} should be selected to satisfy the following conditions:

$$V_{GS\text{-}N6} + (V_{GS\text{-}N8} - V_{TH\text{-}N8}) \le V_{CAS} \le V_{GS\text{-}N8} + V_{TH\text{-}N6} \tag{11}$$

$$V_{GS\text{-}N5} + (V_{GS\text{-}N7} - V_{TH\text{-}N7}) \le V_{CAS} \le V_{GS\text{-}N7} + V_{TH\text{-}N5} \tag{12}$$

Where $V_{GS\text{-}N5}$ is the drain-source voltage of M_{N5}, $V_{GS\text{-}N6}$ is the drain-source voltage of M_{N6}, $V_{GS\text{-}N7}$ is the drain-source voltage of M_{N7}, $V_{GS\text{-}N8}$ is the drain-source voltage of M_{N8}, $V_{TH\text{-}N7}$ is the threshold voltage of M_{N7}, $V_{TH\text{-}N8}$ is the threshold voltage of M_{N8}.

When proper rationing, that means M_{N5} and M_{N6}, M_{N7} and M_{N8} are with the same width-to-length ratio, $V_{GS\text{-}N6} = V_{GS\text{-}N5}$, $V_{GS\text{-}N8} = V_{GS\text{-}N7}$ can be obtained. If V_{CAS} is equal to (or slightly greater than) $V_{GS\text{-}N6} + (V_{GS\text{-}N8} - V_{TH\text{-}N8})$, then the cascode current source consumes minimum headroom (the overdrive of M_{N5} plus that of M_{N7}) while M_{N7} and M_{N8} sustain equal drain-source voltages, allowing i_{in} accurate copying of i_d, which can be operating in the low-voltage cacode mode.

V_{COM} and V_R should also be properly rationed, cause AMP_1 works at deep negative feedback mode, $v_{in} = V_{COM}$ can be obtained. In order to ensure M_{N5} and M_{N6} be in saturation, v_{in} should be greater than $V_{CAS} - V_{TH\text{-}N5}$, when the value of V_{CAS} is fixed, the value of V_{COM} can also be fixed.

An amplifier AMP_B is employed to drive the gate of M_{P5} that forces V_d to be equal to V_R (Fig. 1). Thus, voltage variations at the drain of M_{P5} affect V_d to a lesser extent because AMP_B regulates this voltage, which will makes the voltage across the pixels (R_{D1}~ R_{DN}) stability. With smaller variations at V_d, the current through pixels is constant, yielding a higher output impedance, which can be calculated as :

$$R_{out} = A g_{mp5} R_{DN} r_{OP5} \tag{13}$$

Where A is open loop gain of AMP_B, g_{mp5} is the transconductance of M_{P5}, R_{DN} is the bolometer pixel resistance, r_{OP5} is the equivalent resistance between drain and source of M_{P5}, according to Eq. (13), the higher output impedance can be boosted substantially, which has outstanding matching performance with the current mirror.

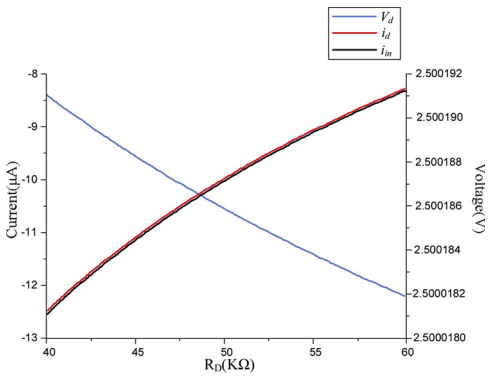

Fig. 4. Simulation of DC sweep for the pixel resistance R_D.

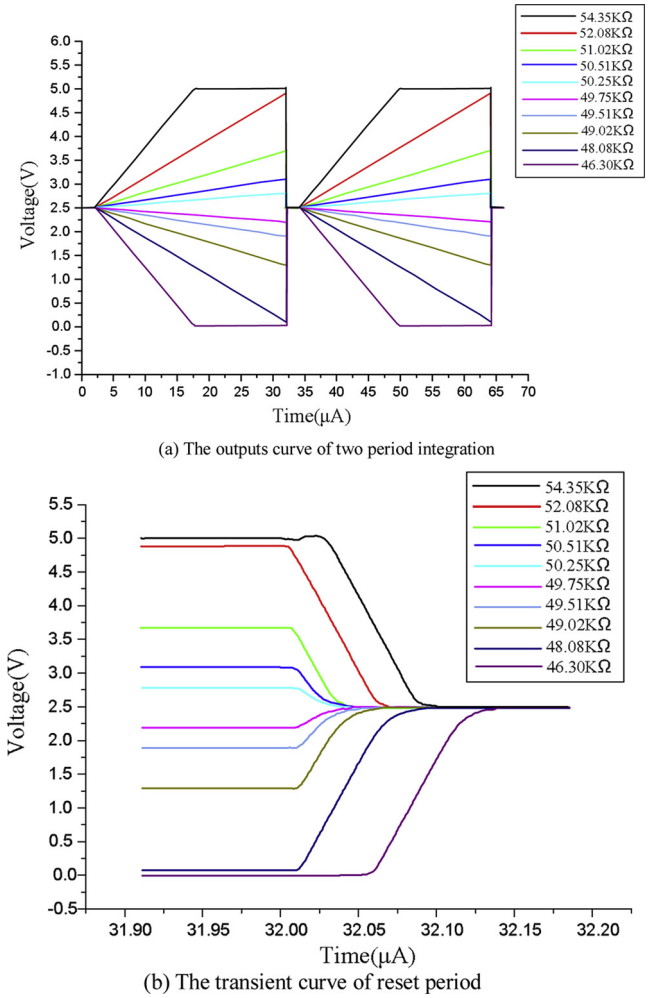

Fig. 5. Simulation of the outputs with different pixel resistance.
(a) The outputs curve of two period integration.
(b) The transient curve of reset period.

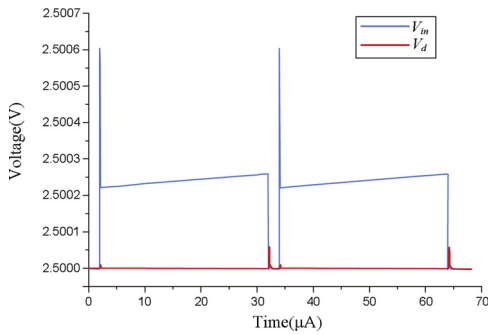

Fig. 6. Simulation of the voltage change on the bias point and the integrator input.

It can also be concluded from Eq. (9) that, the output error of the integrator is caused by the finite open-loop gain of the amplifier, which can be expressed by $e_o(t) = 1/(1+A_V)$. When A_V is infinite, the output voltage of the integrator is:

$$v_o(t) = V_{COM} - I_{in}t \tag{14}$$

Therefore, the increase of the open-loop gain of the integrator helps to reduce the gain error at the output. In order to ensure the output error of the integrator less than 1%, the open loop gain should be at least 40 dB.

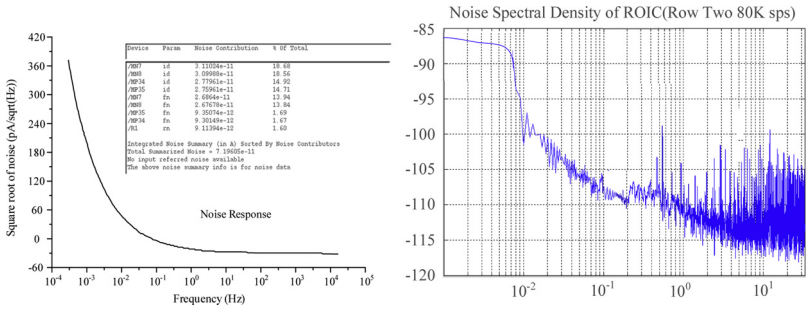

Fig. 7. Simulation of the equivalent input noise.

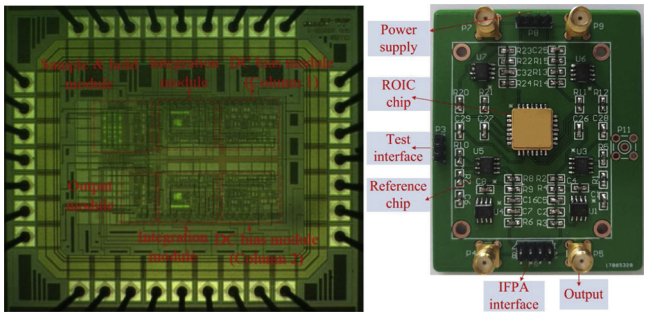

Fig. 8. Die photograph and evaluation board.

In Fig. 2(b), the input current of the integral unit is $i_n(t)$. After the integration with the period of time t, the output voltage is $v_o(t)$, which can be obtained by convolving the input $i_n(t)$ with the impulse response $h(t)$.

$$v_o(t) = i_{in}(t) * h(t) \tag{15}$$

when the integration period is T_{int}, the impulse response is:

$$h(t) = \frac{1}{C_i}\int_{t^-}^{t^-+T_{int}} \delta(x)dx \tag{16}$$

In Eq. (16), C_i is integral capacitor, and the frequency response of the system is:

$$V_o(f) = I_{in}(f) \times H(f) \tag{17}$$

In Eq. (17), $H(f)$ is the transfer function of the system, the following can be obtained by Laplace transform of $h(t)$:

$$H(f) = \frac{T_{int}}{C_i}\frac{\sin(\pi f T_{int})}{\pi f T_{int}} \tag{18}$$

For an ideal integrator, the derivation of above equation is strictly true. In practical applications, the on/off of the reset switches will produce a time error (dead time). For current CMOS process, the relative time error caused by switching on and off is minimal (compared to T_{int}) and is negligible. The integral period T_{int} = 30 μs, the integral capacitor C_i = 10 pF, then the amplitude-frequency response curve is shown in Fig. 3. It can be calculated from Fig. 3 that the bandwidth of readout circuit B is 16.7 KHz. It is known that, the bandwidth of readout circuit is determined by the bandwidth of the detectors, the thermal response time of the detectors is generally within the range from 1 ms to 10 ms [23], that is, the bandwidth of the detectors is generally within the range from 100 Hz to 1KHz. So the bandwidth of readout circuit should be greater than 1KHz, which could ensure it can sense the low-frequency infrared radiation. Moreover, the front-end circuit of the readout circuit requires a low-pass filter, so that the ROIC can have favorable noise performance. Based on the amplitude-frequency curve in Fig. 3, the proposed circuit possesses a low-pass features that exhibits an abatement ability on the input white noise of the system.

4. Simulation and experiment

DC sweep is carried out for the pixel resistance R_D to analyze the stability, linearity and injection efficiency of the bias circuit, the sweep is within the range from 40 K to 60 K. The simulation results are shown in Fig. 4. Seen from the simulation curve, the bias voltage V_d has a high stability (bias error < 0.0001%). It can be known from the figure that the change of the signal current i_d and that of the injection current i_{in} is approximately equal and the calculated injection efficiency is higher than 99.9%. In addition, the calculated linearity of response current due to resistance change is more than 99.9%. Fig. 4 shows that the bias circuit enjoys very high linearity and injection efficiency due to the introduction of the high-swing cascode current mirror.

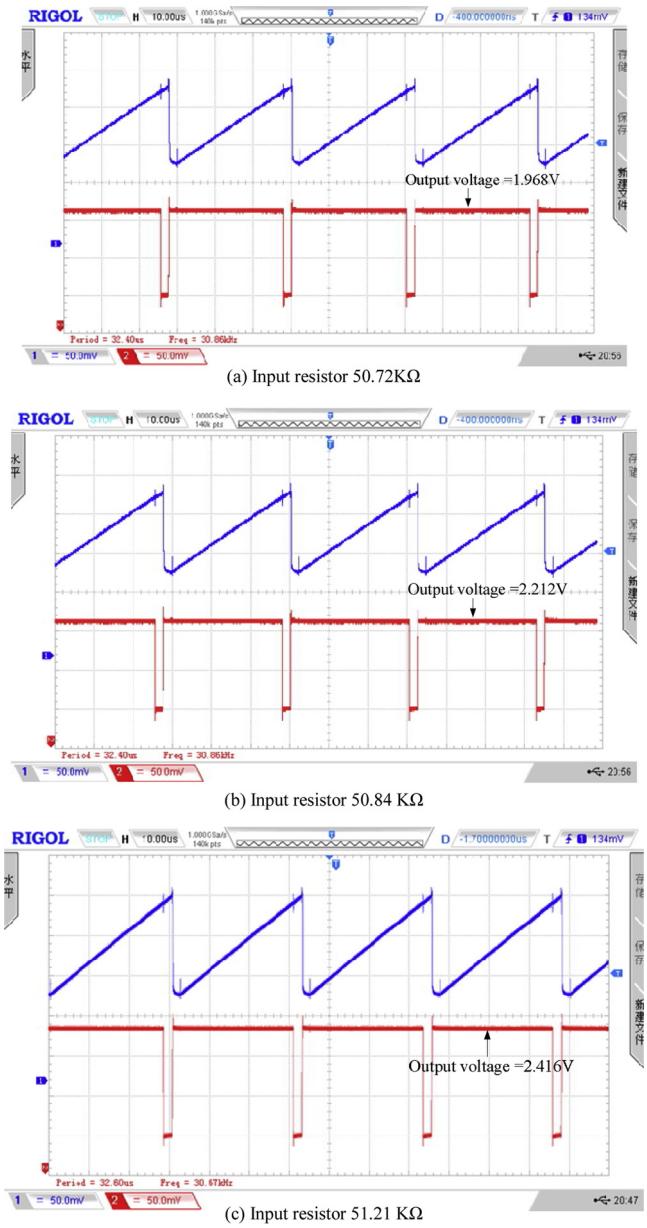

Fig. 9. Measured waveforms when the input terminal connected with different resistors.
(a) Input resistor 50.72KΩ.
(b) Input resistor 50.84 KΩ.
(c) Input resistor 51.21 KΩ.

Fig. 5 is the simulated waveform of the outputs under conditions with different pixel resistance. To verify the linearity and the output swing of the circuit, the resistance of the pixel R_D is set 50.25 K, 50.51 K, 51.02 K, 52.08 K, 54.35 K, 49.75 K, 49.51 K, 49.02 K, 48.08 K and 46.30 K, the bias voltage is set 0.1 V, the reset period is 2 μs and the integration period is 30 μs. It can be known from the simulation curve, the integrator output presents a small integral error and a large linearity. When the pixel resistance R_D is 46.30 K and 54.35 K, the integrator output is saturated. When the power voltage is 5 V, the output swing of the integrator is more than 4.65 V.

To verify the effect of the integration on the bias point and the voltage at the integrator input, the two points (V_d and V_{in} in Fig. 1) are observed in the process of integration. The integration reset period is 2 μs and the integration period is 30 μs. According to Fig. 6, the voltage at the input terminal (V_{in}) is also affected by the voltage change at the output of the integrator. This error is caused by the finite gain of the integral amplifier. In a typical circuit, the input voltage is taken as the bias point, which undoubtedly increases the nonlinear error of the integrator output. V_d is designed as the bias point in the paper, therefore it increases the stability and improves the integration accuracy.

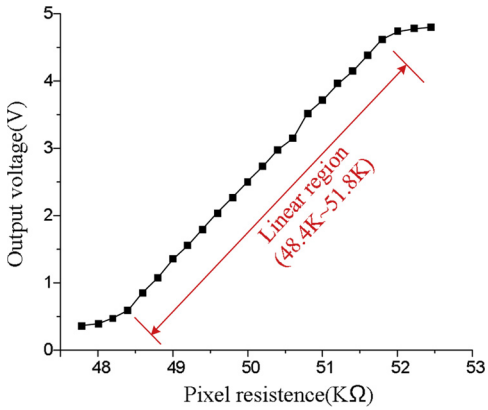

Fig. 10. Linearity of output voltage with respect to pixel resistance test.

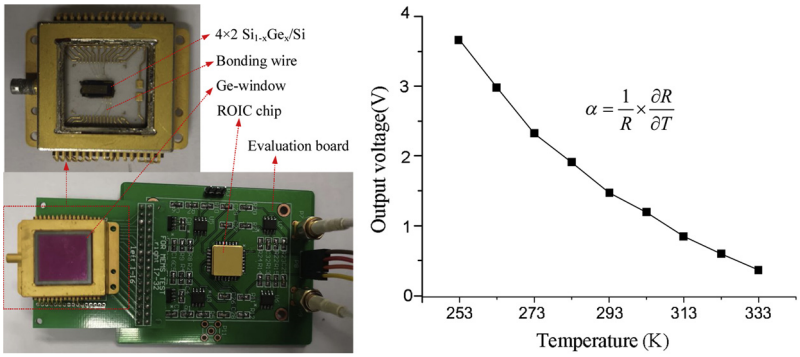

(a) Test ROIC chip with 4 × 2 Si_xGeSi_{1-x} quantum well detector (b) Output voltage with respect to temperature

Fig. 11. Temperature linearity test.
(a) Test ROIC chip with 4 × 2 Si_xGeSi_{1-x} quantum well detector (b) Output voltage with respect to temperature.

Table 1
Comparison between this work and existing ROICs.

Performance	This work	[15]	[22]	[17]	[14]
Technology	AMS 0.35 μm 2P4M CMOS	0.35 μm 2P4M CMOS	CMOS	CMOS	0.8 μm CMOS
Pixel size	17 μm × 17 μm	50 μm × 50 μm	15 μm × 15 μm	45 μm × 45 μm	20 μm × 25 μm
Format	4 × 2	128 × 128	640 × 512	32 × 32	16 × 16
Power supply	5 V	3.3V	3.3V	5 V	5 V
Power/pixel	40μW	1μW	0.4μW	291μW	N
Linearity	> 99.2%	N	99%	N	> 99%
Output voltage swing	4.029 V	1.4V	≤ 2.0 V	2.7V	2.8V
Responsivity	42.5 mV/K	N	6.4 mV/K	N	N
Output noise	0.182 mV rms	0.205 mV rms	0.631 mV rms	0.123 mV rms	N

The simulation of the equivalent input noise is shown in Fig. 7. The equivalent input noise is mainly composed of thermal noise and 1/f noise, where dominates in low frequency band. The simulated RMS noise can be calculated as 6.952e-11A, and the output RMS noise can be calculated as 174μV. Fig. 7 also shows the measured noise spectral density by performing sampling at the output, and then the noise spectral density can be calculated, in Fig. 7 0 dB is defined to be 1 V^2/Hz, and the RMS noise is 182μV. Compared to the simulation results, the measurement noise is slightly higher, which may be caused by the noise introduced by the reference module and the power.

Fig. 8 shows the die photo of the 4 × 2 ROIC chip which is fabricated in AMS 0.35 μm CMOS process and the evaluation board of the chip . A unit cell consumes a 17 μm × 17 μm area, which is consisted of the interface with the bolometer pixels and the switch used to enable different pixels (Fig. 1). The chip consumes less than 0.32 mW total power at 5 V power supply. 40μW power consumption per pixel (Power/pixel) can be calculated by total power consumption/total pixels.

Fig. 9 presents the output waveforms measured by a oscilloscope when the input terminal connected with different resistors, where the blue curve is the output of the integrator and the red one is the output of the sample and hold circuit. The integration period is 30 μs and the reset period is 2 μs. In Fig. 9(a), the input resistor is 50.72KΩ, and the output voltage of the ROIC is 1.968 V. In

Fig. 9 (b), the input resistor is 50.84 KΩ, and the output voltage of the ROIC is 2.212 V. In Fig. 9 (c), the input resistor is 51.21 KΩ, and the output voltage of the ROIC is 2.416 V. It is indicated that, the proposed readout circuit exhibits excellent readout function and high integral linearity.

Fig. 10 shows the linearity of measurement results, the input terminal is connected with a high-precision variable potentiometer to control the input resistance. Based on Fig. 10, the output linearity of the circuit is above 99.2%, the output linear range is 0.593 V–4.622 V and the output swing is 4.029 V. A temperature linearity test is also carried out by connecting with a Si_xGeSi_{1-x} multi-quantum well infrared detector. Fig. 11(a) refers to the test approach with a 4 × 2 Si_xGeSi_{1-x} multi-quantum well detector. The 4 × 2 Si_xGeSi_{1-x} multi-quantum well chip is glued to the ceramic substrate by 84-1 LMISR4 conductive adhesive tape, and it is bonded with the pin of the metal shell by gold wire with a diameter of ϕ30 μm. Finally, parallel seam welding technique was adopted to assemble germanium window in vacuum. The evaluation board and a thermometer were put in the temperature chamber. Temperature was set at different points and stayed for two hours at each point to ensure uniformity. The outputs of the ROIC and temperature were recorded. When the temperature changes within the range of 283 K–323 K, the measured temperature-voltage curve is well consistent with temperature-resistance curve of the Si_xGeSi_{1-x} multi-quantum well [24].

Some key parameters of the chip are measured, and the comparison between this work and other ones of the literature is listed in Table 1. Compared to [15] and [22], this work consumes larger power consumption per pixel, that because the "shared structure" does not embodied its advantages in the small 4 × 2 pixel array. As Fig.1 shows the integration module, the sample & hold module, and the most parts of DC bias module are row-shared, and the multi-switch is column shared. So, the more pixels, the less power consumption per pixel. In case of a large pixel array (like 128 × 128), 128 pixels share the integration module, the sample & hold module, and the DC bias module. In readout process, only one pixel is enabled, the others are disabled. That means at one time, only one of pixels in the same row is biased. Because of this "shared structure", the total power consumption will be considerably reduced in case of a large pixel array.

5. Summary

A new type of readout circuit structure is proposed in the paper, which improves the performance of the readout circuit from two aspects. Firstly, buffer injection method is adopted in the bias circuit to ensure the stability of the bias point and improve current injection efficiency. Secondly, a high-swing cascode current mirror is introduced in the integration circuit, which prevents the bias point from integration fluctuation. Proposed ROIC enjoys features of high linearity, high injection efficiency and low noise, which is suitable for high performance infrared focal plane arrays.

Acknowledgments

This work is supported by Scientific Research Project Natural Science Foundation of Jiangsu Province (No. BK20170853, No. BK20170850), Fundamental Research Funds for the Central Universities (No. 309181A8805)

References

[1] M. Yazici, O. Ceylan, A. Shafique, et al., A new high dynamic range ROIC with smart light intensity control unit, Infrared Phys. Technol. 82 (2017) 161–169.
[2] C.C. Hsieh, C.Y. Wu, F.W. Jih, et al., Focal-plane-arrays and CMOS readout techniques of infrared imaging systems, IEEE Trans. Circ. Syst. Video Technol. 7 (4) (1997) 594–605.
[3] M.R. Abdel-Rahman, Vanadium oxide thin films with high midwave & longwave infrared thermo-optic coefficients and high temperature coefficients of resistance, Optik 159 (2018) 79–86.
[4] H. Zhao, X. Liu, C. Xu, A low power cryogenic 512×512-pixel infrared readout integrated circuit with modified MOS device model, Infrared Phys. Technol. 61 (November) (2013) 111–119.
[5] M. Kimata, MEMS-based uncooled infrared focal plane arrays, TRANSDUCERS 2007 - 2007 International Solid-State Sensors, Actuators and Microsystems Conference (2007) 1357–1360.
[6] Y.S. Kim, D.H. Woo, Y.M. Jo, et al., Low-noise and wide-dynamic-Range ROIC with a self-selected capacitor for SWIR focal plane arrays[J], IEEE Sens. J. 17 (1) (2017) 179–184.
[7] A.J. Blanksby, M.J. Loinaz, Performance analysis of a color CMOS photogate image sensor, IEEE Trans. Electron Devices 47 (January (1)) (2000) 55–64.
[8] A.M. Fowler, R.G. Probst, J.P. Britt, et al., Evaluation of an indium antimonide hybrid focal plane array for ground-based infrared astronomy, Opt. Eng. 26 (3) (1987) 232–240.
[9] N.A. Lum, J.F. Asbrock, R. White, et al., Low-noise, low-temperature 256 X 256 Si:As IBC staring FPA[j], Proc. SPIE Int. Soc. Opt. Eng. 1946 (1993) 100–109.
[10] J.T. Longo, D.T. Cheung, A.M. Andrews, et al., Infrared focal Planes in intrinsic semiconductors[J], IEEE J. Solid State Circ. 13 (1) (1978) 139–158.
[11] K. Chow, J.P. Rode, D.H. Seib, et al., Hybrid infrared focal-plane arrays[J], Electron Dev. IEEE Trans. 29 (1) (1982) 3–13.
[12] S. Garg, R.S. Saxena, V. Niranjan, Improving injection efficiency of gate modulation read out integrated circuit (ROIC) interface for HgCdTe IR photodiodes[J], Microsyst. Technol. 23 (9) (2016).
[13] C.C. Hsieh, C.Y. Wu, T.P. Sun, et al., High-performance CMOS buffered gate modulation input (BGMI) readout circuits for IR FPA[J], IEEE J. Solid State Circ. 33 (8) (1998) 1188–1198.
[14] H. Kulah, T. Akin, A current mirroring integration based readout circuit for high performance infrared fpa applications[J], IEEE Trans. Circ. Syst. Ii Analog. Digit. Signal Process. 50 (4) (2003) 181–186.
[15] D.H. Woo, I.K. Nam, H.C. Lee, Smart reset control for wide-dynamic-Range LWIR FPAs[J], IEEE Sens. J. 11 (1) (2010) 131–136.
[16] T.P. Sun, Y.C. Lu, L.L. Kang, et al., A buffer direct injection and direct injection readout circuit with mode selection design for infrared focal plane arrays[J], Infrared Phys. Technol. 63 (2) (2014) 140–146.
[17] X. Chen, Q. Lv, A versatile CMOS readout integrated circuit for microbolometric infrared focal plane arrays[J], Opt. Int. J. Light Electron. Opt. 124 (20) (2013) 4639–4641.
[18] T.P. Sun, Y.C. Lu, H.L. Shieh, A novel readout integrated circuit with a dual-mode design for single- and dual-band infrared focal plane array[J], Infrared Phys. Technol. 60 (60) (2013) 56–65.
[19] T. Zhou, J. Zhao, Y. He, et al., A readout integrated circuit (ROIC) employing self-adaptive background current compensation technique for infrared focal plane

array (IRFPA)[J], Infrared Phys. Technol. 90 (2018) 122–132.
[20] J.L. Tissot, M. Vilain, O. Legras, Uncooled amorphous silicon TEC-less 1/4 VGA IRFPA with 25 μm pixel-pitch for high volume applications[J], Proc. SPIE Int. Soc. Opt. Eng. 7298 (2008) 69401Z-69401Z-8.
[21] M. Kim, S. Park, K. Lee, et al., Uncooled infrared micro-bolometer FPA for multiple digital correlated double sampling[J], IEEE Photonics Technol. Lett. 30 (6) (2018) 517–520.
[22] O. Altun, F. Tasdemir, Low-noise Readout Circuit for SWIR Focal Plane Arrays[C]// SPIE Defense + Security, (2017), p. 1017707.
[23] F. Niklaus, C. Jansson, A. Decharat, et al., Uncooled infrared bolometer arrays operating in a low to medium vacuum atmosphere: performance model and tradeoffs[J], Proc. SPIE Int. Soc. Opt. Eng. 6542 (2007) 65421M-65421M-12.
[24] T. Zhou, T. Dong, Y. Su, et al., High-precision and low-cost wireless 16-channel measurement system for multi-layer thin film characterization[J], Measurement 46 (9) (2013) 3600–3611.